USA-EN

MINI-S-PP-GH-FC

Installation and Operating Instruction for B.E.G. Controls - Secondary sensor MINI-S-PP-GH-FC

1. Product information

- MINI secondary sensor requires connection to a MINI primary sensor and a power pack with an RJ 12 port or a proprietary low voltage system.
- Designed for indoor locations - High Ceilings
- Up to 4 secondary sensors may be connected with a primary sensor to increase detection coverage.
- Spring clips for quick and easy installation in suspended ceilings and light fixtures
- 5-year limited warranty
- Masking blinds included
- ROHS compliant

2. Operation with MINI Primary sensor and power pack with RJ 12 port

The MINI-S extends the motion detection coverage of the system. Review MINI Primary sensor and corresponding power pack manuals for complete system operation.

3. Safety information

⚠ **Work should be carried out by qualified professionals or by instructed persons under the direction and supervision of qualified skilled electrical personnel in accordance with electrical regulations.**

⚠ **The device is not to be used to isolate other equipment from the mains supply!**

4. Mounting

Select sensor(s) mounting location based on room dimensions and sensor coverage pattern. Avoid placing sensor(s) less than four feet away from a heat and/or ventilation sources. Avoid placing sensor(s) where view will be directed outside of intended controlled space, this to prevent outside sources from activating sensor(s).

A circular opening 1.3 in/34 mm in diameter must be made in the ceiling.

Having connected the cables in accordance with the national and local electrical codes, connect the sensor to the power pack using the RJ12 connector. Pass sensor's RJ12 connector through ceiling opening. Next, squeeze spring clips through ceiling opening. Sensor should clip securely into place. (See figure)

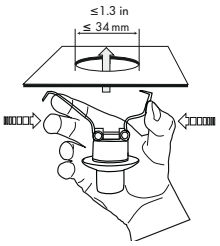

⚠ When using primary and secondary devices, please mount the primary device at the place with the least amount of natural light.

5. Position LED

LED 1 red

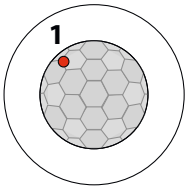

6. Self test cycle/Startup behavior

When power is first applied, the sensor enters an initial 60 second self-test cycle. During this time the device does not respond to movement and stays on.

7. Range

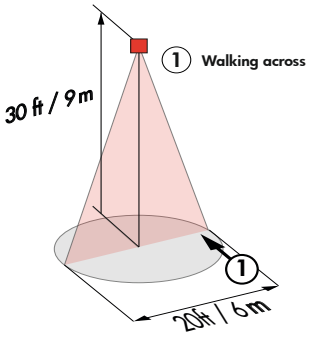

8. Exclude sources of interference

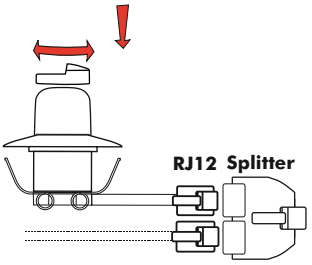

To prevent false activation from external heat-emitting sources, use blinds to mask sensor viewing angle.

9. Decription / Part No. / Accessory

Description	Part No.
MINI-S-PP-GH-FC	97187

10. Technical data

Operating voltage:	24 V DC
Power consumption:	1 W
Pulse output:	Digital output
Ambient temperature:	-13°F-122°F/-25°C to +50°C
Protection:	Suitable for indoor use and dry locations only.
Recommended height for mounting:	30 ft / 9 m
Range of coverage:	walking across 20 ft /6 m
Area of coverage:	360°
Dimensions:	H 1.6 in x Ø 1.77 in H 41 x Ø 45 mm

11. Manual switching

⚠ **See manual of the power pack!**

12. LED-functional indicators

LED activity after sensor is energized (60 second self-test cycle period).	
Operating state	**LED function indicators**
Self-test cycle	Red blinks once per second and for 60 seconds

LED function indicators during operation	
Process	**LED function indicators**
Motion detection	Red LED flashes on each detected movement

13. MINI-S-PP-GH-FC - Connection

Connect the B.E.G. Controls MINI-S-PP-GH-FC to a MINI primary sensor and a power pack with an RJ12 port using the RJ12 connector and splitter.

NOTE:

Splitter: (RJ12 male to dual RJ12 female included with every secondary mini sensor)

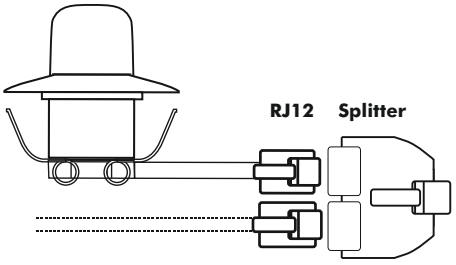

14. Wiring diagrams with Power pack PP-A-J and PP-1-J

Standard mode with Primary/Secondary

(Refer to primary sensor and corresponding power pack manuals for wiring diagrams that include secondary sensors.)

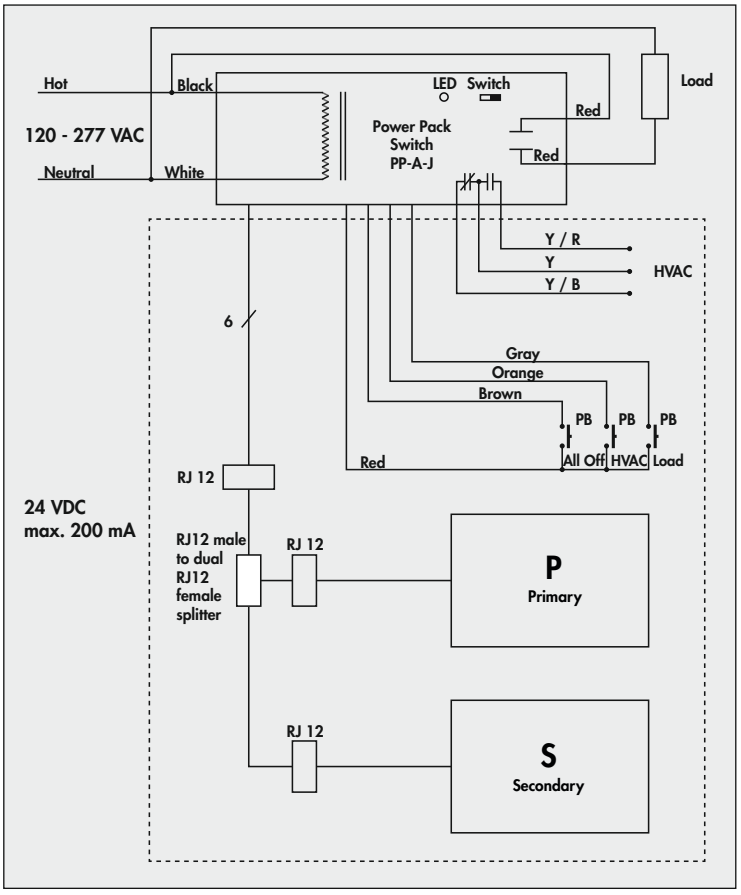

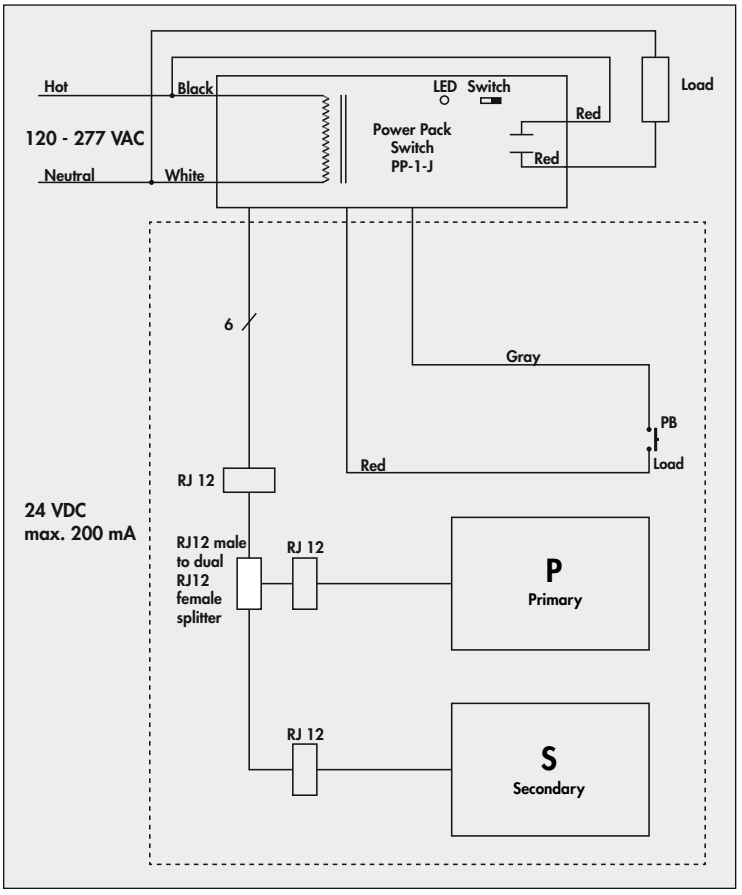

⚠ Secondary sensors and primary sensor must be connected to the same power pack.

B.E.G. Controls
277 Highway 74 N, Suite 319
Peachtree City, GA 30269
Phone: 770-349-6341
Email: info@begcontrols.com

MAN 8888101716_1